Primary lithium battery
LM 33550

3 V Primary lithium-manganese dioxide (Li-MnO_2)
High power
D-size spiral cell

For applications requesting excellent voltage response and operating life in - 40°C/+ 70°C environments

Benefits
- High voltage response, stable during most of the lifetime of the application
- High drain/pulse capabilty
- Minimum voltage delay after long dormant periods
- Competitive capacity at high current and low temperature
- Easy integration into compact systems
- Low self-discharge rate *(less than 2% after 1 year of storage at + 20°C)*

Key features
- Steel container
- Hermetic glass-to-metal sealing
- Built-in safety vent
- Non-corrosive electrolyte
- Restricted for transport *(Class 9)*
- Made in the USA

Main applications
- Radio communication
- Measuring equipment
- Marine equipment
- ELTS, EPIRBS, etc.

Cell size reference	**R20 - D**
Electrical characteristics	
(Typical values relative to cells stored for one year or less at + 30°C max.)	
Nominal capacity *(at 250 mA + 20°C 2.0 V cut-off. The capacity restored by the cell varies according to current drain, temperature and cut-off).*	13 Ah
Open circuit voltage (at + 20°C)	3.2 V
Nominal voltage (under 1 mA at + 20°C)	3.0 V
Pulse capability : Typically up to 8 A *(The voltage readings may vary according to the pulse characteristics, the temperature, and the cell's previous history. Fitting the cell with a capacitor may be recommended in severe conditions. Consult Saft.)*	
Maximum recommended continuous current *(To maintain cell heating within safe limits)*	4 A
Storage (recommended) (for more severe conditions, consult Saft)	+ 30°C (+ 86°F) max
Operating temperature range *(Operation below ambient T may lead to reduced capacity and lower voltage readings)*	- 40°C /+ 70°C
Physical characteristics (with sleeve)	
Diameter (max)	34.2 mm (1.35 in.)
Height (max, without tabs)	61.4 mm (2.42 in.)
Typical weight	120 g (4.23 oz)
Li metal content	approx. 3.7 g
Standard cell comes with vent washer at the bottom and two radial 0.15 mm thick nickel tabs. Other configurations available on request.	

LM 33550

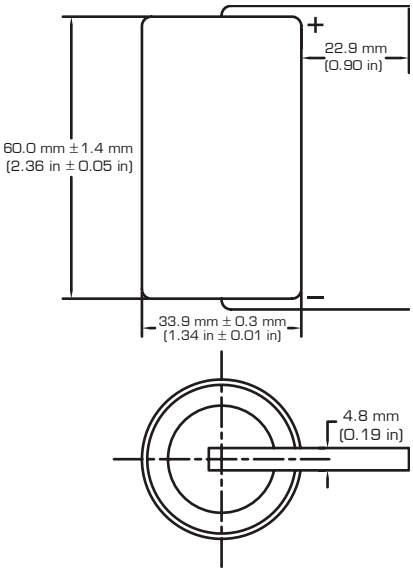

Storage

- The storage area should be clean, cool, dry and ventilated
- Do not abstruct venting mechanism

Warning

- Fire, explosion and burn hazard
- Do not recharge, short circuit, crush, disassemble, heat above 70°C (158°F), incinerate, or expose contents to water.
- Do not solder directly to the cell *(Use tabbed cell versions instead.)*

Voltage plateau vs. current and temperature at mid-discharge

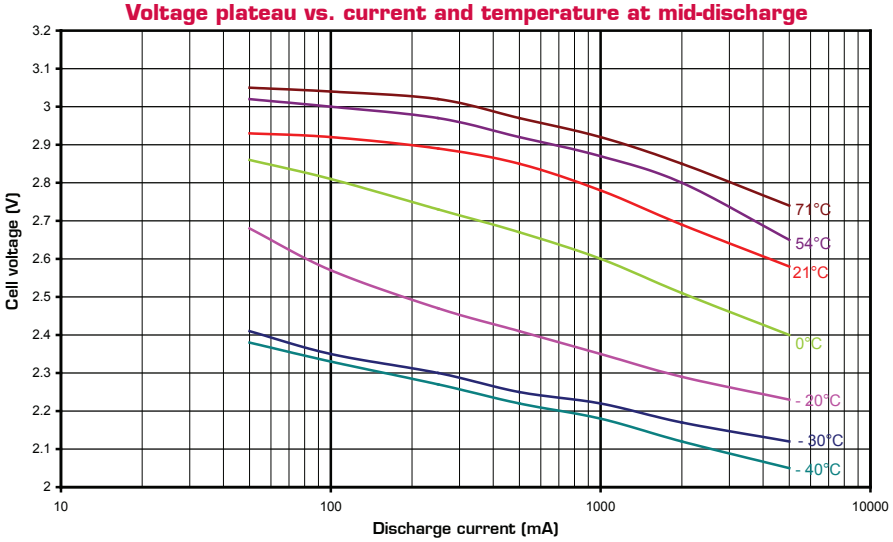

Discharge curves at 20°C and various discharge currents

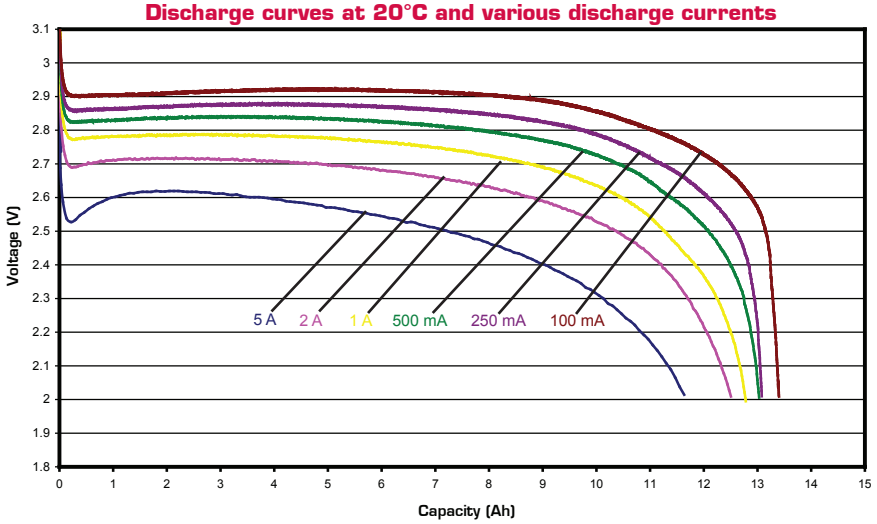

Capacity vs. current and temperature

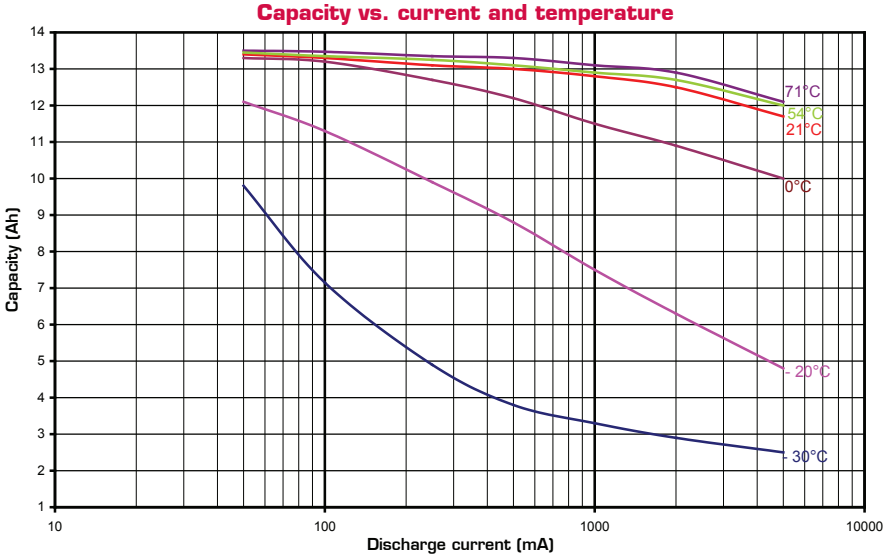

Saft
Specialty Battery Group

313 Crescent Street
Valdese, NC 28690 - USA
Tel.: +1 (828) 874 4111
Fax: +1 (828) 879-3981

www.saftbatteries.com

Doc N° 31098-2-0111
Edition: January 2011

Data in this document are subject to change without notice and become contractual only after written confirmation by Saft.

For more details on primary lithium technologies please refer to Primary Lithium Batteries Selector Guide Doc No 31048-2.
Published by the Communications Department.
Photo credit: Saft